CVE.06... Cartridge exclusion valve

CVE.06...

This 3-way cartridge exclusion valve allows to connecting in T a normally circuit in pressure, when the setting pressure at valves is reached, on the piloting port.

Max. operating pressure	320 bar
Setting ranges	20 ÷ 200 bar
Max. flow	30 l/min
Hydraulic fluids	Mineral oils DIN 51524
Fluid viscosity	10 ÷ 500 mm²/s
Fluid temperature	-25°C ÷ 75°C
Ambient temperature	-25°C ÷ 60°C
Max. contamination level	class 10 in accordance with NAS 1638 with filter $ß_{25} \geq 75$
Weight	0,3 Kg
Tightening torque	30 ÷ 40 Nm (3 ÷ 4 Kgm)

Ordering code

CVE	Cartridge exclusion valve
06	Size
C	Adjustment with grub screw
3	Setting ranges 20 ÷ 200 bar
00	No variant
1	Serial No

Hydraulic symbol

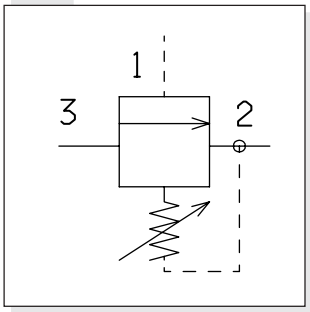

Pressure drops (3 → 2)

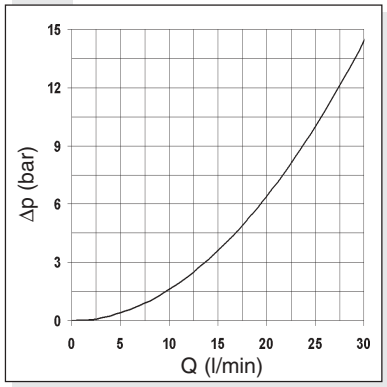

Overall dimensions

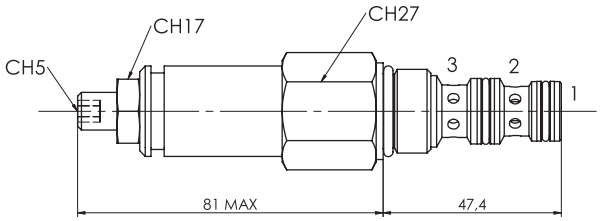
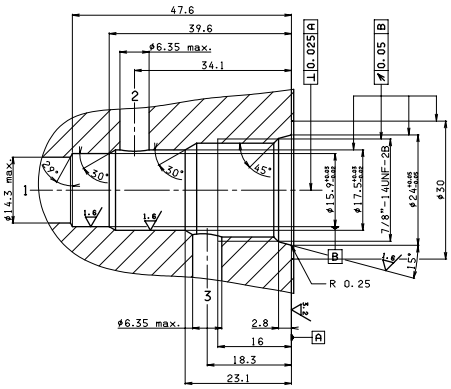
Seat dimensions